S-200 Single Output Series



Size：199*110*50mm

Features:

- AC input range selectable by switch
- Built-in EMI filter, tiny ripple
- Protections short circuit/overload/over voltage Over temperature
- Cooling by free air convection
- 43,000 hours of continuous operation at 25℃
- 100% full load burn-in test
- Compliance to IEC/EN60335-1 (PD3) and IEC/EN61558-1,2-16 suitable for home appliance
- 2 years warranty

SPECIFICATION

ISO9001:2008 CE RoHS

Model		S-200-5	S-200-12	S-200-15	S-200-24	S-200-48
OUTPUT	DC VOLTAGE	5V	12V	15V	24V	48V
	RATED CURRENT	40A	16.7A	13.3A	8.4A	4.2A
	CURRENT RANGE	0 ~ 40A	0~16.7A	0 ~ 13.3A	0 ~ 8.4A	0 ~ 4.2A
	RATED POWER	200W	200.4W	199.5W	201.6W	201.6W
	RIPPLE NOISE(Max)	150mVp-p	150mVp-p	150mVp-p	200mVp-p	200mVp-p
	VOLTAGE ADJ.RANGE	4.5 ~ 5.5V	10.8 ~ 13.2V	13.5~16.5V	21.6~ 26.4V	43.2 ~ 52.8V
	VOLTAGE TOLERANCE	±1.0%	±1.0%	±1.0%	±1.0%	±1.0%
	LINE REGULATION	±0.5%	±0.5%	±0.5%	±0.5%	±0.5%
	LOAD REGULATION	±0.5%	±0.5%	±0.5%	±0.5%	±0.5%
	SETUP,RISE TIME	200ms, 100ms				
	HOLD UP TIME (Typ.)	30ms (full load)				
INPUT	VOLTAGE RANGE	85 ~ 132VAC /170~264VAC by switch 240~370VDC				
	FREQUENCY RANGE	47 ~ 63Hz				
	EFFICIENCY(Typ.)	78%	82%	84%	84%	84%
	AC CURRENT(Typ.)	1.9A/115VAC 1.2A/230VAC				
	INRUSH CURRENT(Typ.)	COLD START: 36A/230V				
	LEAKAGE CURRENT	<2.5mA / 240VAC				
PROTECTION	OVERLOAD	115 ~ 135% rated output power				
		Protection tye:Hiccup mode,recovers automatically after fault condition is removed				
	OVER VOLTAGE	5.75 ~ 6.75V	13.8 ~ 16.2V	17.25 ~ 20.25V	28.4 ~ 32.4V	55.2 ~ 64.8V
		Protection type : Shut off o/p voltage, clamping by zener diode				
ENVIRONMENT	WORKING TEMP.	-10 ~ +60℃ (Refer to derating curve)				
	WORKING HUMIDITY	20 ~ 90% RH non-condensing				
	STORAGE TEMP.,HUMIDITY	-20 ~ +85℃, 20 ~ 95% RH				
	TEMP.COEFFICIENT	±0.03%/℃ (0 ~ 50℃)				
	VIBRATION	10 ~ 500Hz, 2G 10 min/1cycle,60min.each X Y Z axes				
SAFETY	SAFETY STANDARDS	GB4943.1, EN 60950.1 APPROVED				
	WITHSTAND VOLTAGE	I/P-O/P:1.5KVAC I/P-FG:1.5KVAC O/P-FG:0.5KVAC				
	ISOLATION RESISTANCE	I/P-O/P, I/P-FG, O/P-FG:100M Ohms / 500VDC				
	EMC EMISSION	EN61000-3-2:2014/EN61000-3-3:2013				
	EMC IMMUNITY	EN 55032:2015/EN55035:2017/60950-1				
OTHERS	MTBF	≥720.6K hrs MIL-HDBK-217F(25℃)				
	DIMENSION	199*110*50mm (L*W*H)				
	PACKING	0.8Kg; 30pcs/24Kg/0.9CUFT				

NOTE

1. All parameters NOT specially mentioned are measured at 230VAC input,rated load and 25℃of ambient temperature.
2. Ripple noise are measured at 20MHz of bandwidth by using a 12"twisted pair -wire terminated with a 0.1uf and 47uf parallel capacitors.
3. Tolerance includes set up tolerance,line regulation and load regulation.
4. Derating output is required under low input voltage. Please refer to the derating curve for details.
5. The power supply should be considered as a part of the components in the system. All EMC tests will test the test samples on a metal iron plate with a thickness of 1mm, a length of 360mm width of 360mm.

Mechanical Specification

Unit:mm

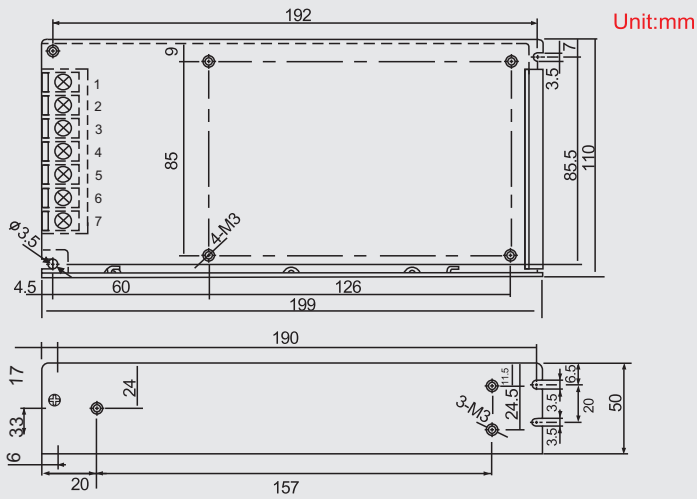

Terminal Pin No.Assignment:

Pin No.	Assigment	Pin No.	Assigment
1	AC/L	4-5	DC OUTPUT -V
2	AC/N	6-7	DC OUTPUT +V
3	FG⏚		

Block Diagram

fosc:65KHz

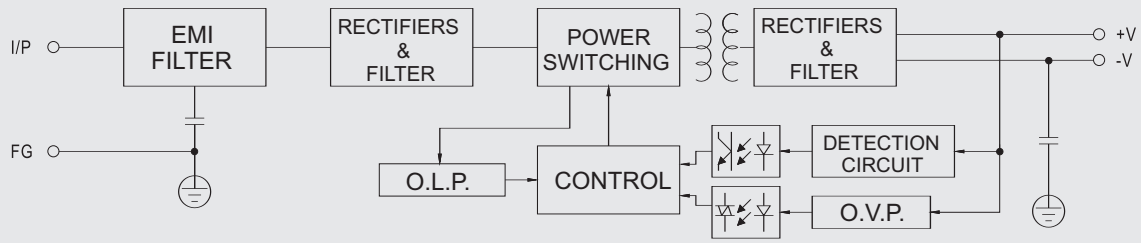

Derating Curve

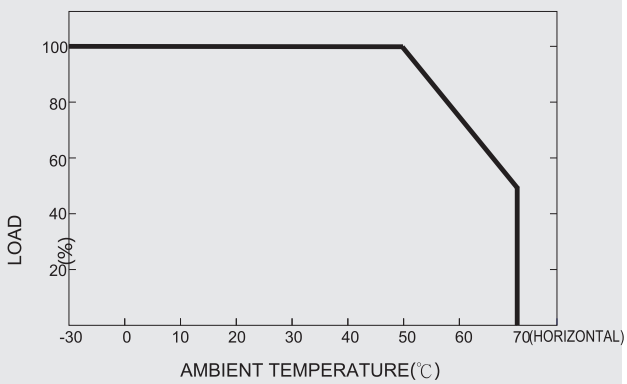

Static Characteristic

